STEERING, WHEEL - Z26SPD92AN/AH/BN/BH (C750957)

2026 RZR - RZR PRO S ULTIMATE (R01) - Z26SPD92AN/AH/BN/BH

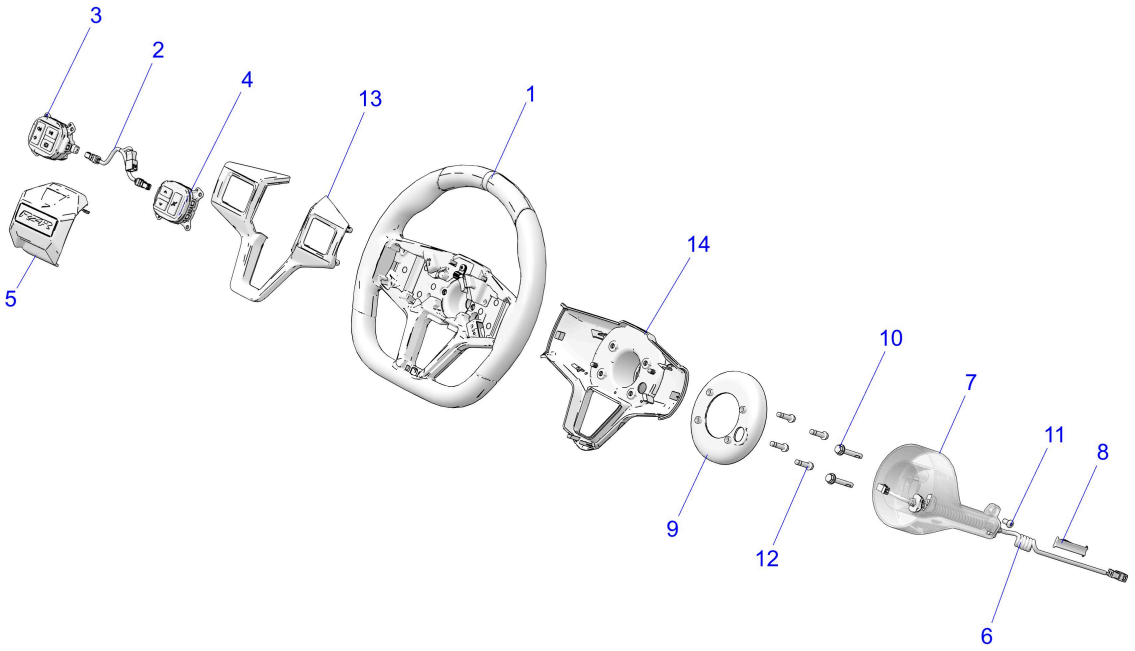

© 2025 Polaris Industries Inc.

C750957

Reference #	*Part#*	*Description*	*Quantity*
	-------	SCR-M4x15,GSK [NOT SHOWN-7528469]	7
1	1824823	WHEEL-STEERING,13"	1
2	2414689	HARNESS-STEERING WHEEL	1
3	4081086	SWITCH-ASSY,SWC,250K,LH	1
4	4081087	SWITCH-ASSY,SWC,250K,RH	1
5	5456146-070	CAP-STEERING WHEEL,BASE,BLK	1
6	2414807	ASM-COIL,CORD,DRUM [INCL. 7 & 8]	1
7	5455733	GUIDE-COLUMN HARNESS	1
8	7082493	CLIP-WELD STUD,5MM,TAPE-ON	1
9	5455734	COVER-COLUMN HARNESS	1
10	7518470	BOLT-M6X1.0X40 HXHD,FLG,W/PATC	2
11	7519063	SCREW-TXBH-M6X1.0X12 8.8 ZPB D20	1
12	7519297	SCREW-HXFLG,M6X1.0X25,10.9	4
13	1830455	WHEEL-STEERING,FRT BEZEL	1
14	1830456	WHEEL-STEERING,REAR BEZEL	1

Copyright 1996-2026 Polaris Industries U.S.A All rights reserved.